data sheet: G210P3

Kroeplin GmbH
Gartenstraße 50
D-36381 Schlüchtern

Tel.: 06661 86 0
Fax: 06661 86 39
Mail: sales@kroeplin.com
Web: www.kroeplin.com

Kroeplin
Längenmesstechnik

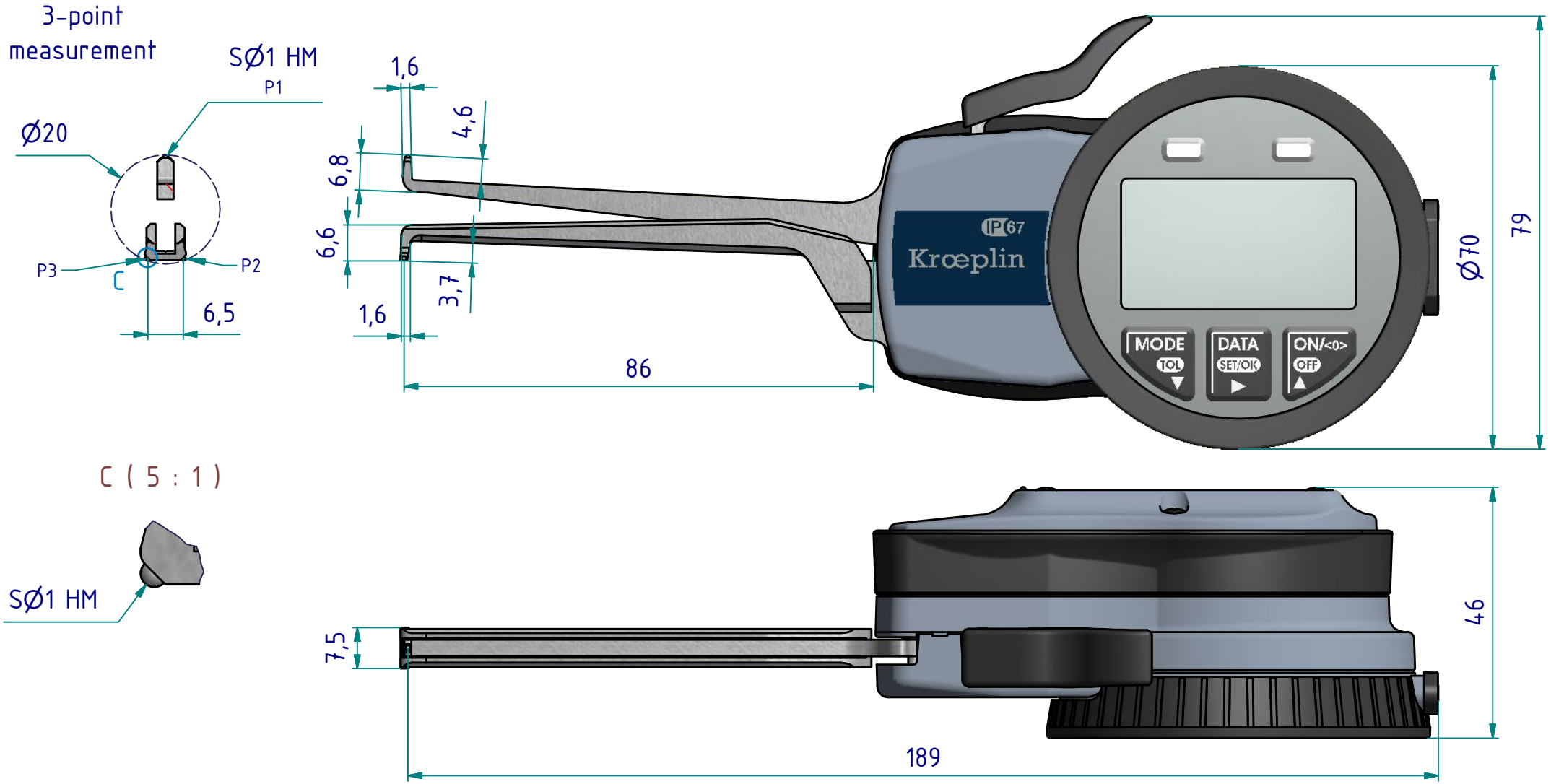

subject to technical alterations

type:	G - P3
range:	10 - 20 mm
range of indication:	9,8 - 20,5 mm
digital step:	0,005 mm
scale interval:	-
measuring force:	1,1 - 1,6 N
weight:	250 g

acceptable deviations
VDI/VDE/DGQ 2618 Bl. 12.1/13.1)

max. permissible errors "G":	0,02 mm
repeatability "r":	0,01 mm
reference temperature:	20° C
operation temperature:	10° C - 30° C
storage temperature:	-10° C - 50° C

scale:	1:1
drawing-nr.:	DAB-G210P3_KR_e
date of issue:	21.05.12
name:	J.Kröckel
revision status:	
revision date:	

data sheet: G210P3

Kroeplin GmbH
Gartenstraße 50
D-36381 Schlüchtern

Tel.: 06661 86 0
Fax: 06661 86 39
Mail: sales@kroeplin.com
Web: www.kroeplin.com

Kroeplin
Längenmesstechnik

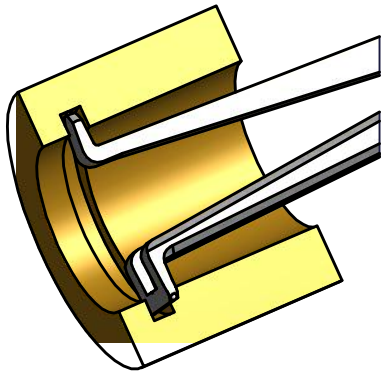

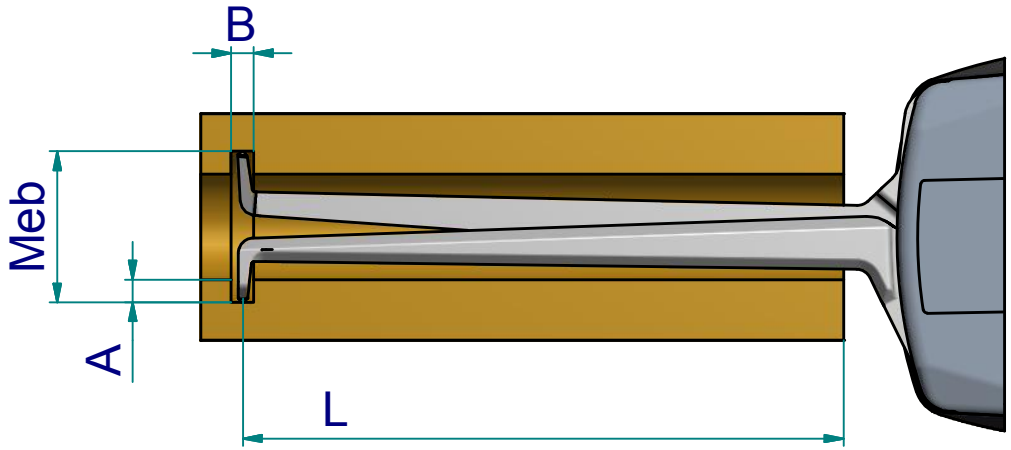

measuring capacity

groove depth A [mm]	measuring range Meb [mm]								
	10	11	12	13	14	15	16	18	20
0	0 / 73	0 / 73	0 / 74	0 / 74	0 / 74	0 / 74	0 / 74	0 / 75	0 / 75
1			1,7 / 72	1,7 / 72	1,8 / 73	1,8 / 73	1,7 / 73	1,7 / 74	1,7 / 74
2					1,7 / 71	1,7 / 72	1,7 / 72	1,7 / 73	1,6 / 74
3							2,1 / 64	1,9 / 71	1,8 / 73
3,5								2,6 / 67	2,7 / 71
	B / L								

B = minimum groove width [mm]
L = maximum usable arm length [mm]

Example: Meb = 16 A = 2 B = 1,7 L = 72

subject to technical alterations

drawing-nr.: DAB-G210P3_KR_e
date of issue: 21.05.12
name: J.Kröckel

revision status:
revision date:

data sheet: G210P3

Kroeplin GmbH
Gartenstraße 50
D-36381 Schlüchtern

Tel.: 06661 86 0
Fax: 06661 86 39
Mail: sales@kroeplin.com
Web: www.kroeplin.com

Kroeplin
Längenmesstechnik

interface as accessories available:

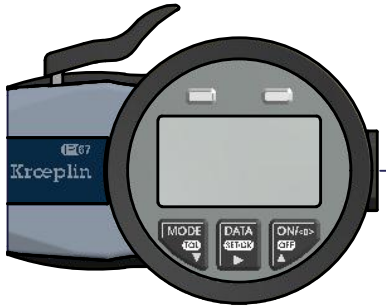

Interface-adapter

1961-09

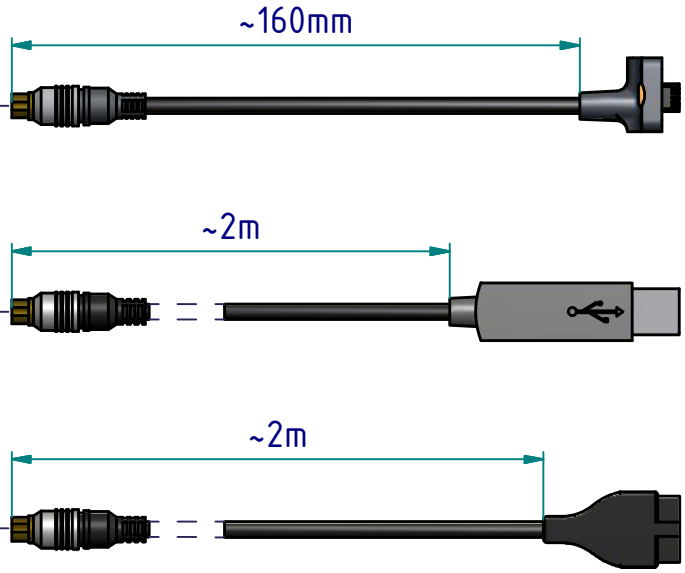

Data cable U-WAVE®
2482-04

Data cable USB
2482-05

Data cable DIGIMATIC
2482-07

valid from Gauge-S/N: I
Always specify serial number
when ordering Interfaces or accessories!

subject to technical alterations

drawing-nr.:	DAB-G210P3_KR_e
date of issue:	21.05.12
name:	J.Kröckel
revision status:	
revision date:	